5

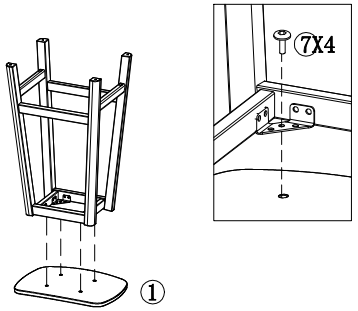

6

1.Please check that all screws are tightened before use;
2.If the product shakes after a period of use, all screws need to be retightened.

①		1
②		2
③		2
④		2

⑤		4
⑥		4
⑦	M6X12	20+1
⑧	M6X35	4+1
		1

SEDATE

1

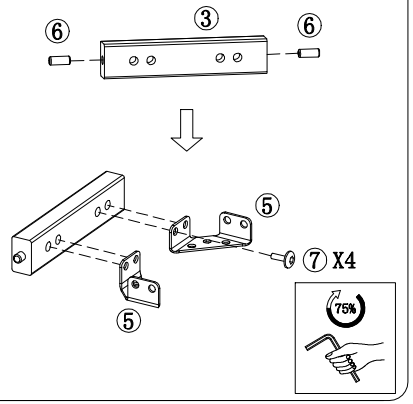

2

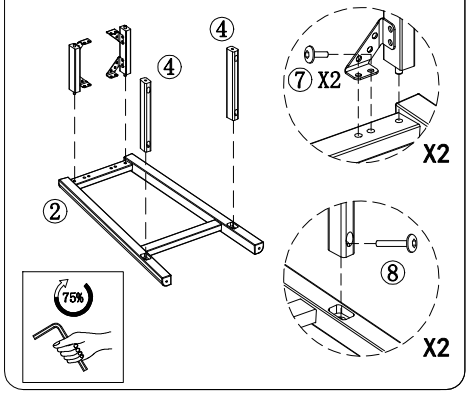

3

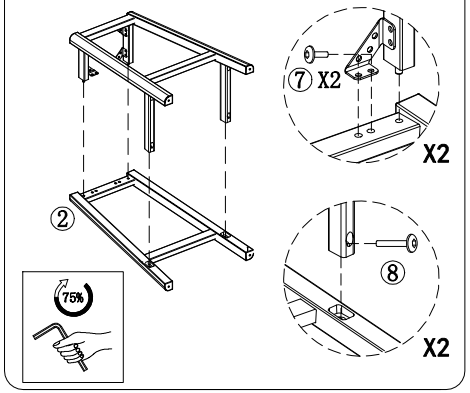
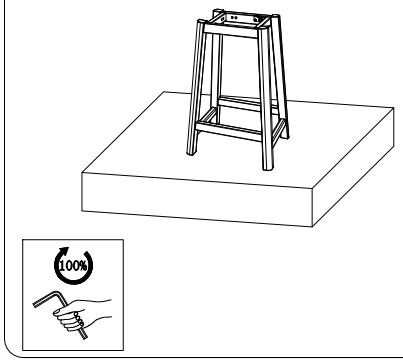
4