ITEM NO.: MD10963-1-360T

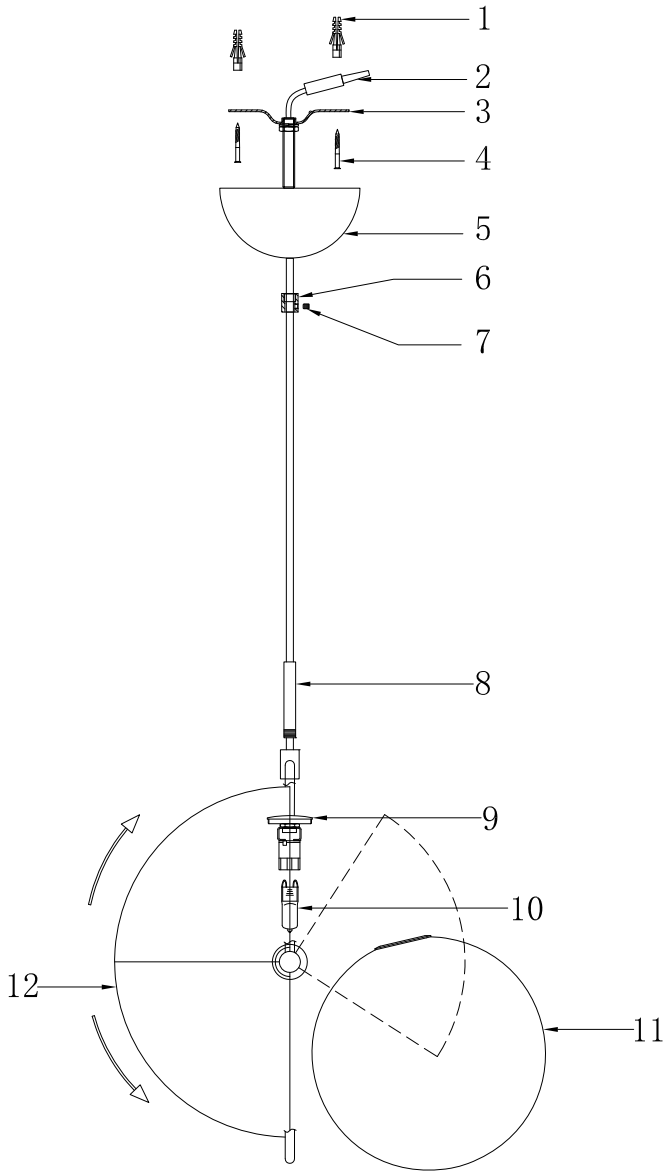

220V-240V ~50/60Hz G9 1 X Max. 3.5W

INSTALLATION NOTICE

1. Please read the instruction sheet carefully before installing the lamps
2. In order to products, please use gloves when assembling the lamps.
   Don't scratch the surface to the products.
3. The lamps can't be used any longer if the cords of lamps are damaged.

WARNING

Shut off the power ,before assembling the lamps. Make sure it's safe then assemble the lamps strictly according to the instruction sheet. Our company will not be responsible for any breakage caused by incorrect installation.